Exemplar

AS 91631 (3.34) Produce working drawings to communicate production details for a complex design. (6 credits)

Achievement	Achievement with Merit	Achievement with Excellence
Produce working drawings to communicate production details for a complex design.	Produce working drawings to clearly communicate production details for a complex design.	Produce working drawings to effectively communicate production details for a complex design.

Marking Schedule

Produce a **set of related instrumental** working drawings showing **exterior and interior detail** of components **related** to the construction and assembly of a design.	Produce a **precise** set of related instrumental working drawings showing exterior and interior detail of components that **explains** the construction and assembly of a design.	Produce a precise and **cohesive** set of related instrumental working drawings through the **appropriate selection of views and modes** that **enable** the construction and/or assembly of a design.
Demonstrate an ability to use **drawing conventions and presentation techniques** to communicate details of a complex design.	Demonstrate an ability to **accurately apply** drawing conventions and presentation techniques to **clearly** communicate details of a complex design.	Demonstrate an ability to accurately apply drawing conventions and presentation techniques to clearly communicate **production** details of a complex design.

Commentary: **This submission is assessed at low Excellence**.

This submission is the Assembly Drawings of the frame of a two-person seat.

It is a set of related drawings of the multiple components required for a complex design. It incorporates drawing conventions such as numbering each drawing as part of the set and uses recognised scales.

The set of drawings are generated in a CAD program, this assists in its accuracy and precision. The drawings are prefaced by an exploded isometric drawing along with a key that describes the individual component parts, the materials and its assembly. An orthographic view of the entire frame is also drawn followed by drawings of each of the component parts.

This submission is regarded as a cohesive set with an appropriate selection of views and modes that enable the construction, assembly and production of the design.

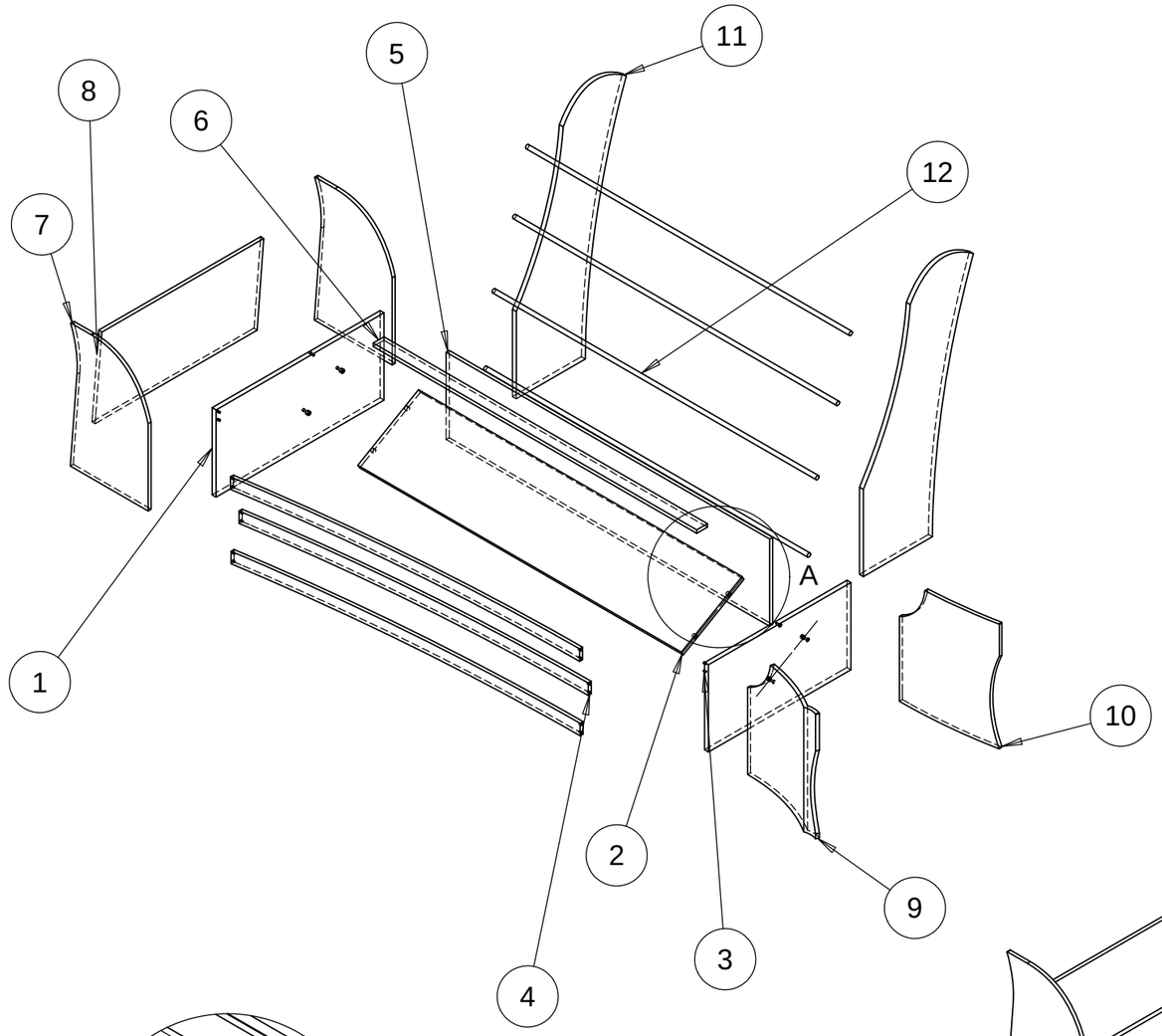

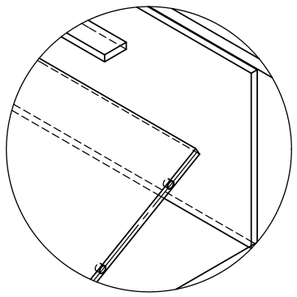

DETAIL A
SCALE 1 : 10

DWG NO.	PART NUMBER	DESCRIPTION	QTY.	ITEM NO.
COMP 5	left seat side	AA Grade Plywood	1	1
COMP 12	lower seat centre brace	AA Grade Plywood	1	2
COMP 11	right side	AA Grade Plywood	1	3
COMP 9	Part2	AA Grade Plywood	3	4
COMP 2	back brace	AA Grade Plywood	1	5
COMP 10	centre top brace	AA Grade Plywood	1	6
COMP 6	right handrest side	AA Grade Plywood	2	7
COMP 7	right handrest lower brace	AA Grade Plywood	1	8
COMP 3	left handrest 2.0	AA Grade Plywood	1	9
COMP 4	left handrest	AA Grade Plywood	1	10
COMP 1	back rest side piece	AA Grade Plywood	2	11
COMP 8	back brace centre pole	3150 H14 alumium alloy	4	12

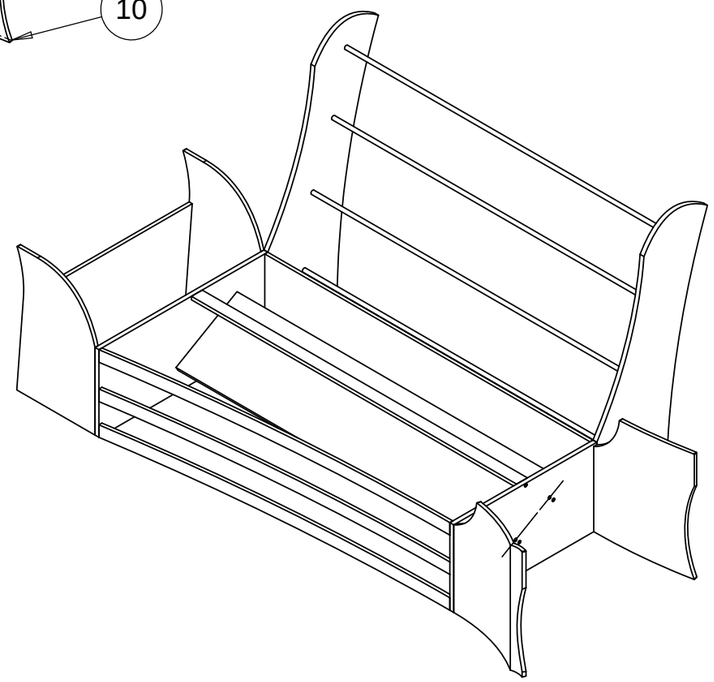

AUCKLAND GRAMMAR SCHOOL
Technology Department

Drawn TEO

Date 14/10/15

TITLE: working drawings sheets

SCALE 1:50

SHEET 1 OF 14

DWG NO. EXP DWG

A3

DIMENSIONS IN MILLIMETRES

DO NOT SCALE

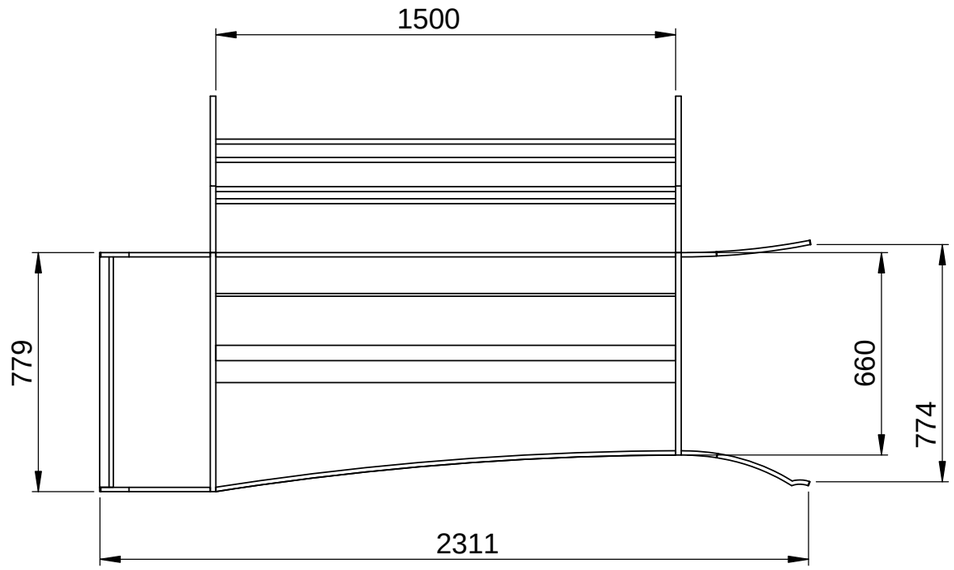

ITEM NO.	PART NUMBER	DESCRIPTION	QTY.
1	left seat side	AA Grade Plywood	1
2	lower seat centre brace	AA Grade Plywood	1
3	right side	AA Grade Plywood	1
4	Part2	AA Grade Plywood	3
5	back brace	AA Grade Plywood	1
6	centre top brace	AA Grade Plywood	1
7	right handrest side	AA Grade Plywood	2
8	right handrest lower brace	AA Grade Plywood	1
9	left handrest 2.0	AA Grade Plywood	1
10	left handrest	AA Grade Plywood	1
11	back rest side piece	AA Grade Plywood	2
12	back brace centre pole	3150 H14 alumium alloy	4

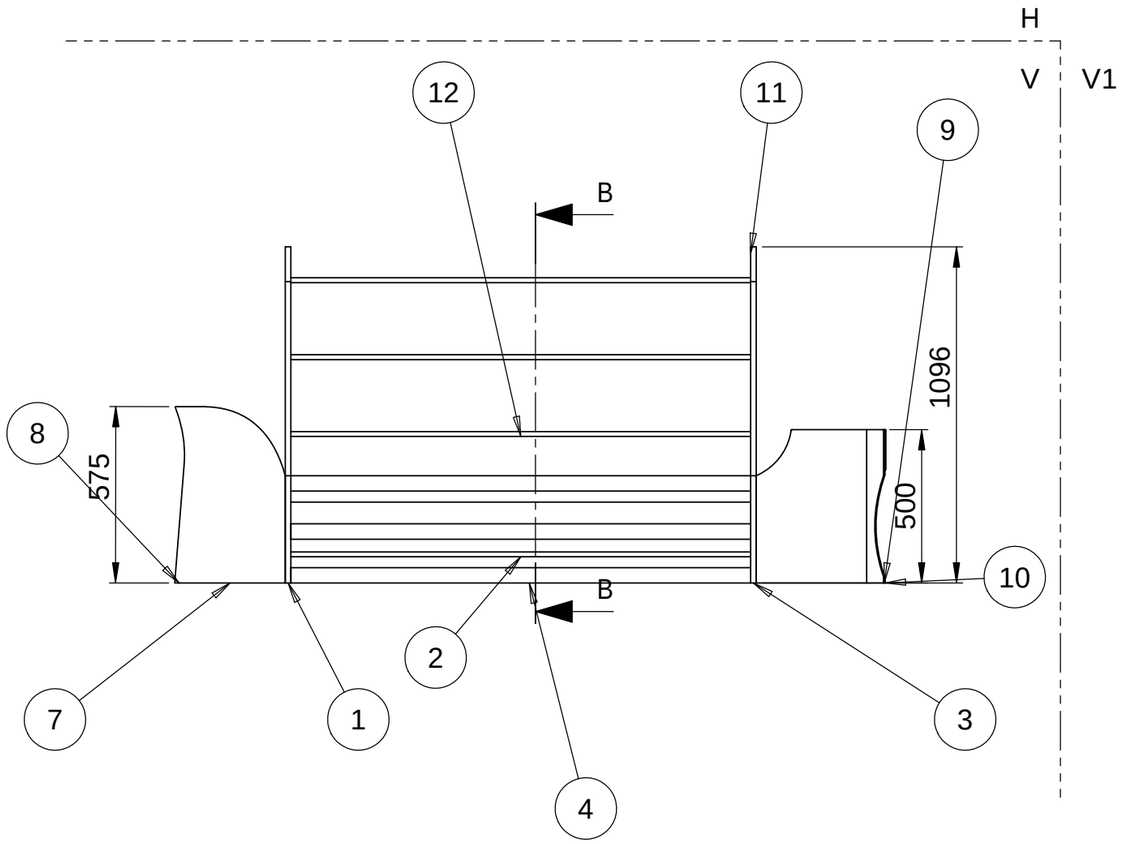

Constructed using double dowed glue joints and self tapping screws.

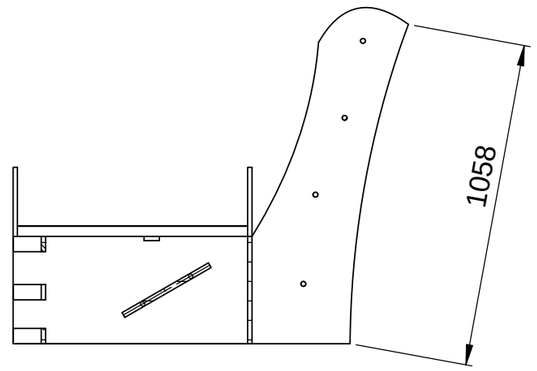

SECTIONB-B
SCALE 1 : 20

DIMENSIONS IN MILLIMETRES

DO NOT SCALE

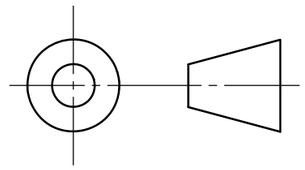

AUCKLAND GRAMMAR SCHOOL
Technology Department

Drawn TEO	Date 14/10/15
TITLE: Assembly Drawing	
SCALE 1:20	DWG NO. ASMB DWG
SHEET 2 OF 14	A3

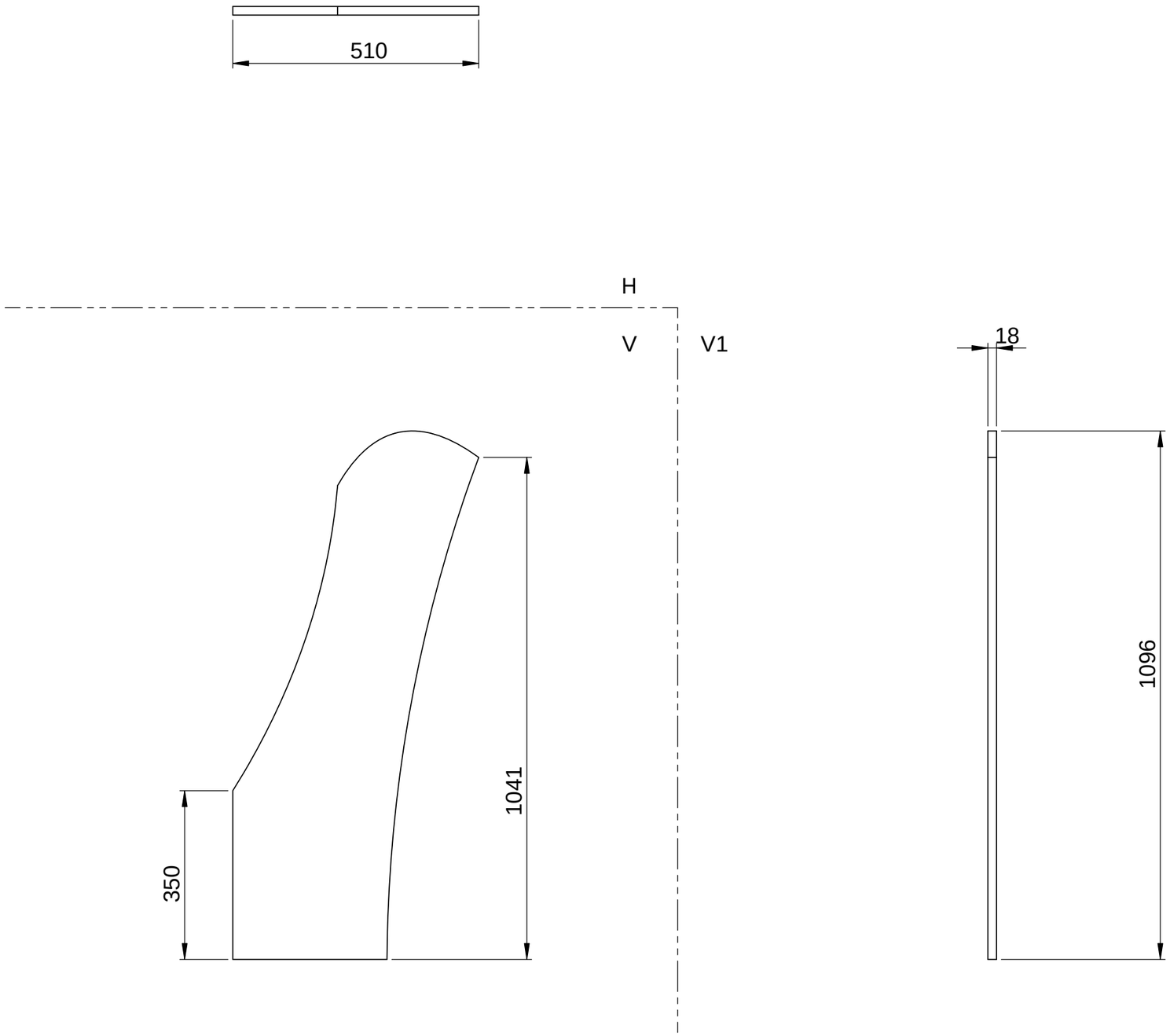

DIMENSIONS IN MILLIMETRES

DO NOT SCALE

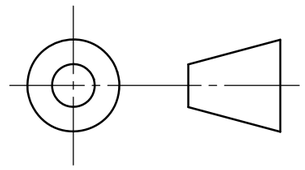

AUCKLAND GRAMMAR SCHOOL Technology Department		
Drawn TEO	Date 14/10/15	
TITLE: Backrest side piece		
AA Grade Plywood		
SCALE 1:10	DWG NO. COMP 1	A3
SHEET 3 OF 14		

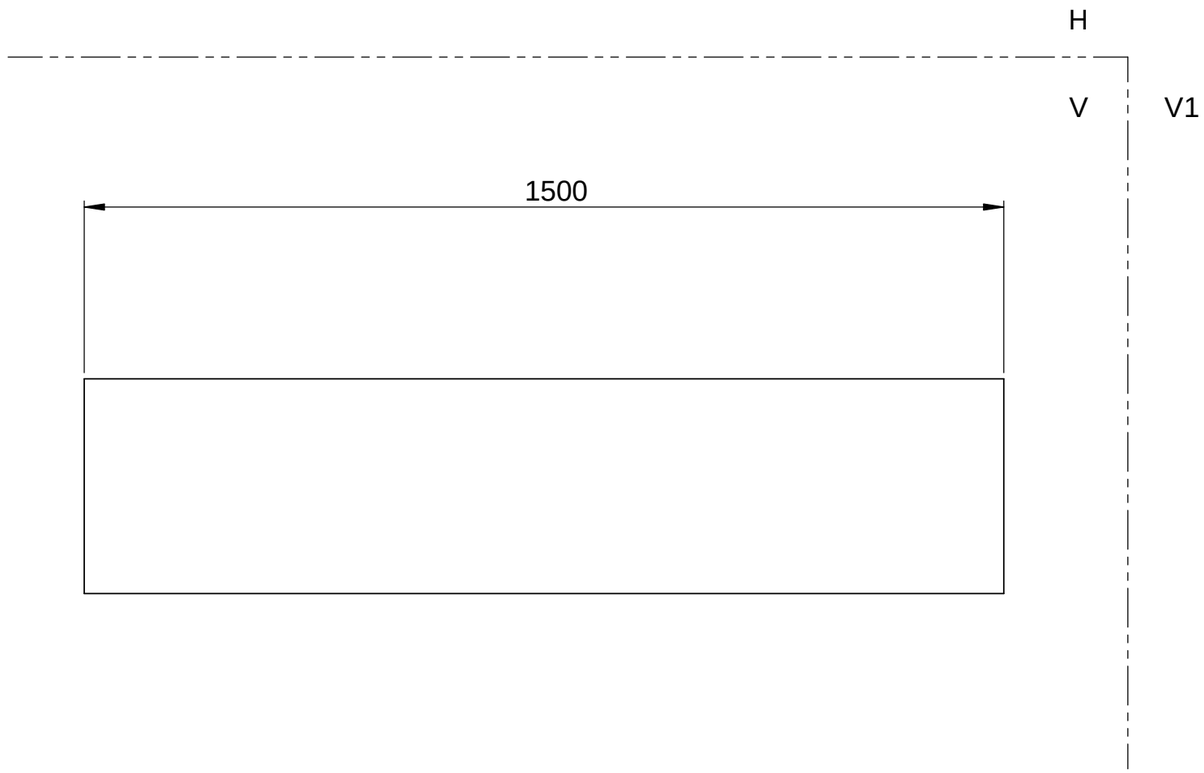

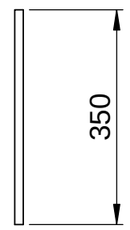

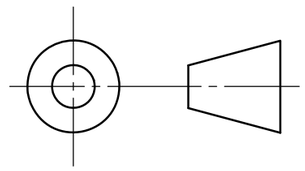

DIMENSIONS IN MILLIMETRES

DO NOT SCALE

AUCKLAND GRAMMAR SCHOOL Technology Department		
Drawn TEO	Date 14/10/15	
TITLE: Back Brace		
AA Grade Plywood		
SCALE 1:10	DWG NO. COMP 2	A3
SHEET 4 OF 14		

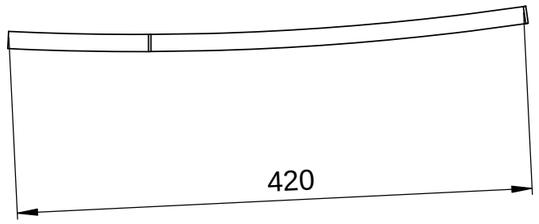

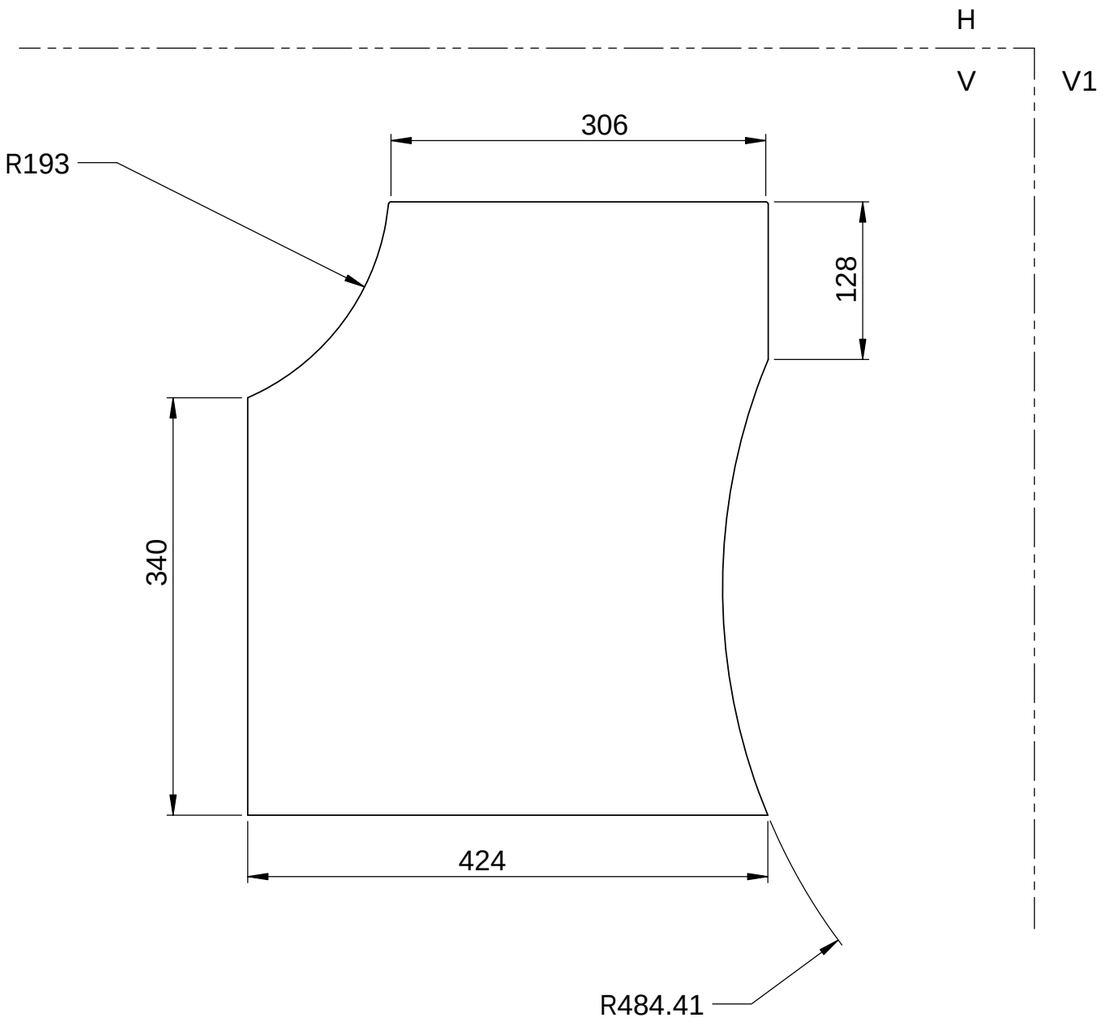

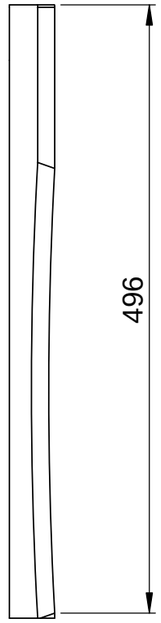

DIMENSIONS IN MILLIMETRES

DO NOT SCALE

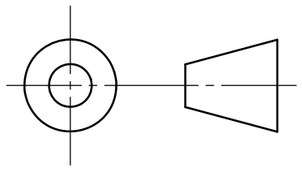

AUCKLAND GRAMMAR SCHOOL Technology Department		
Drawn TEO	*Date* 10/15/15	
TITLE: Back left handrest side		
AA Grade Plywood		
SCALE 1:5	DWG NO.	A3
SHEET 5 OF 14	COMP 3	

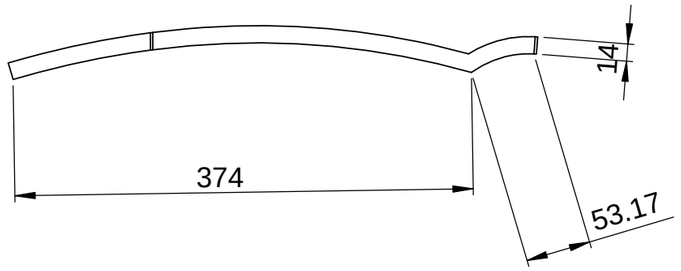

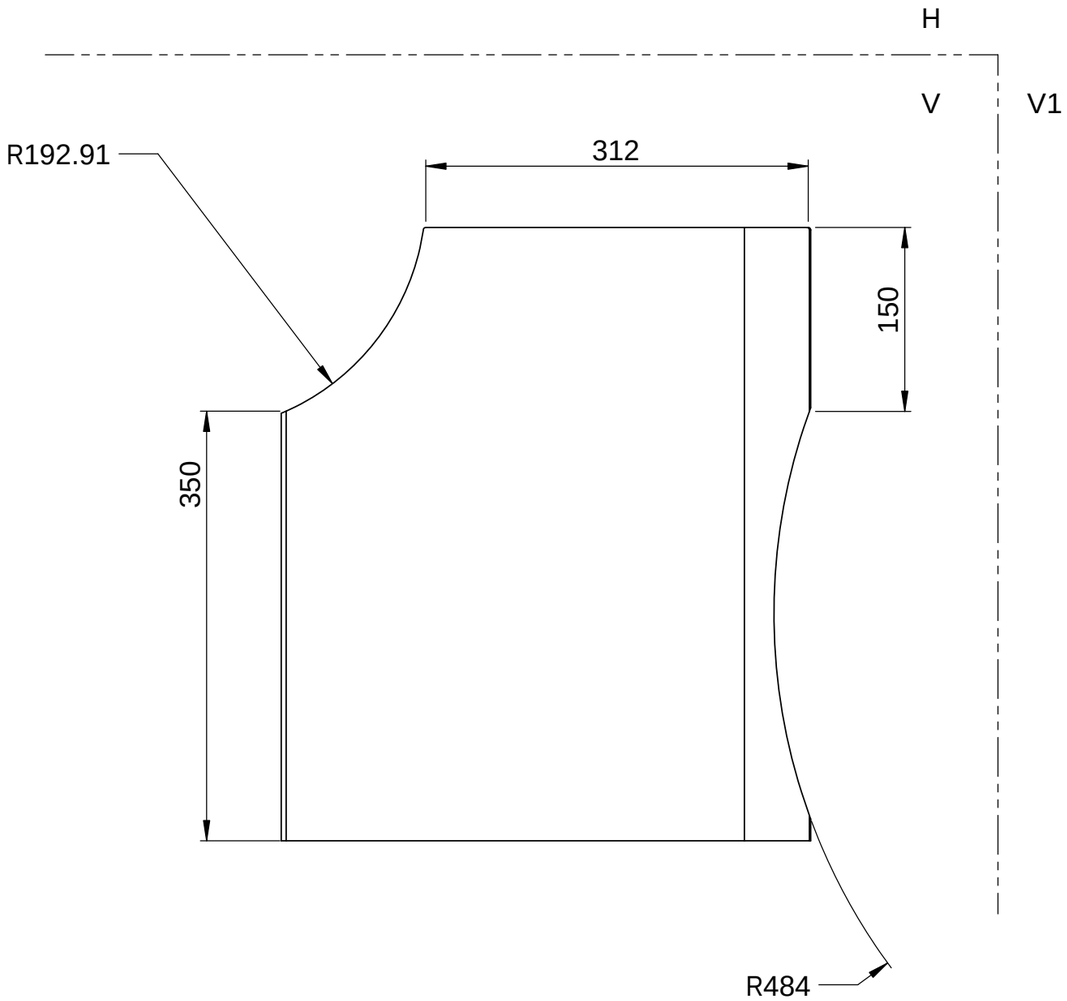

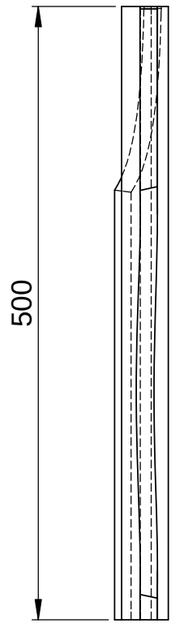

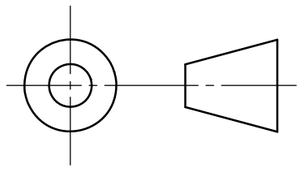

DIMENSIONS IN MILLIMETRES

DO NOT SCALE

AUCKLAND GRAMMAR SCHOOL Technology Department		
Drawn TEO	Date 10/15/27	
TITLE: Front left handrest side		
AA Grade Plywood		
SCALE 1:5	DWG NO. COMP 4	A3
SHEET 6 OF 14		

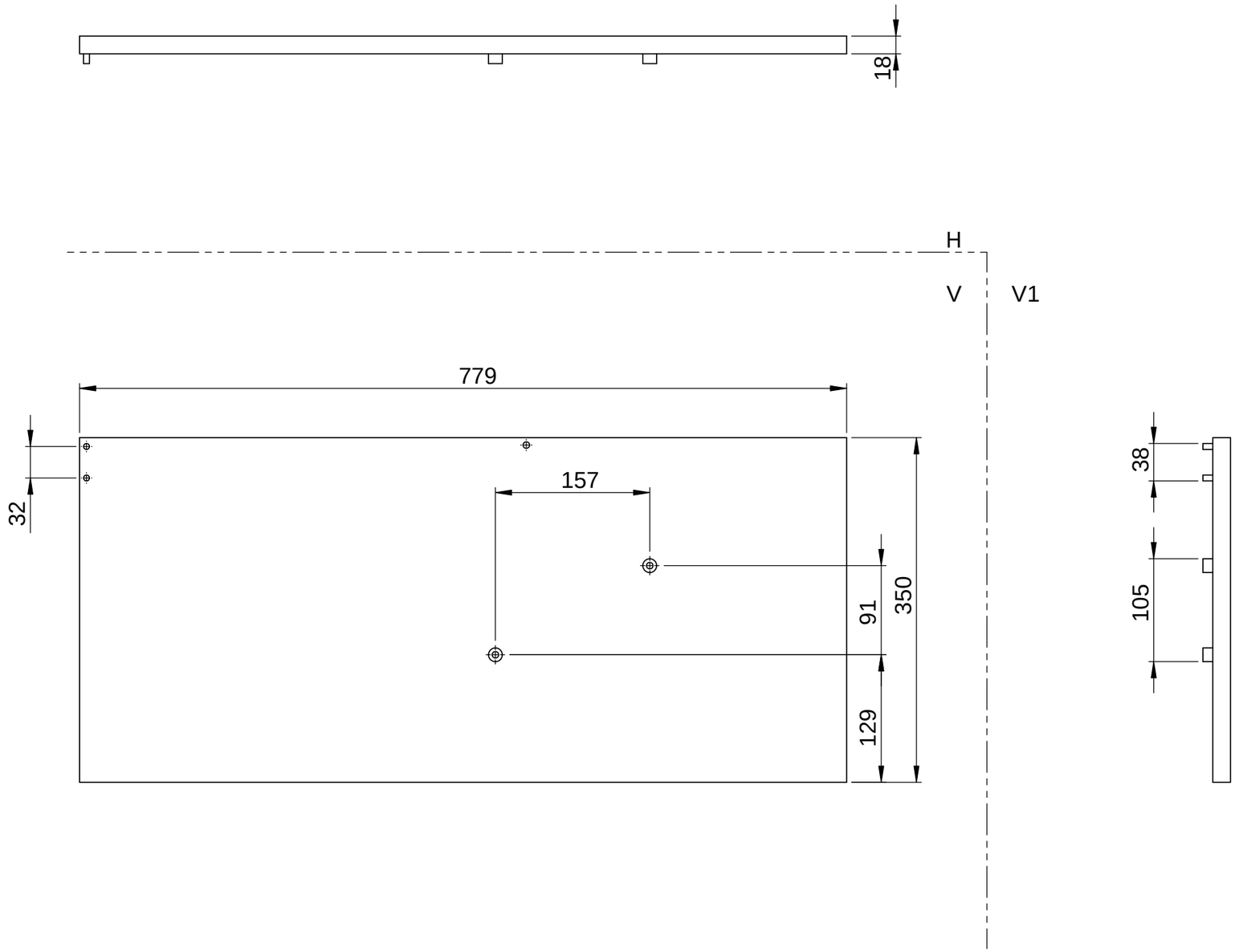

AUCKLAND GRAMMAR SCHOOL Technology Department	
Drawn TEO	Date 10/15/15
TITLE: Left seat side	
AA Grade Plywood	
SCALE 1:5	DWG NO. COMP 5	A3
SHEET 7 OF 14	

DIMENSIONS IN MILLIMETRES

DO NOT SCALE

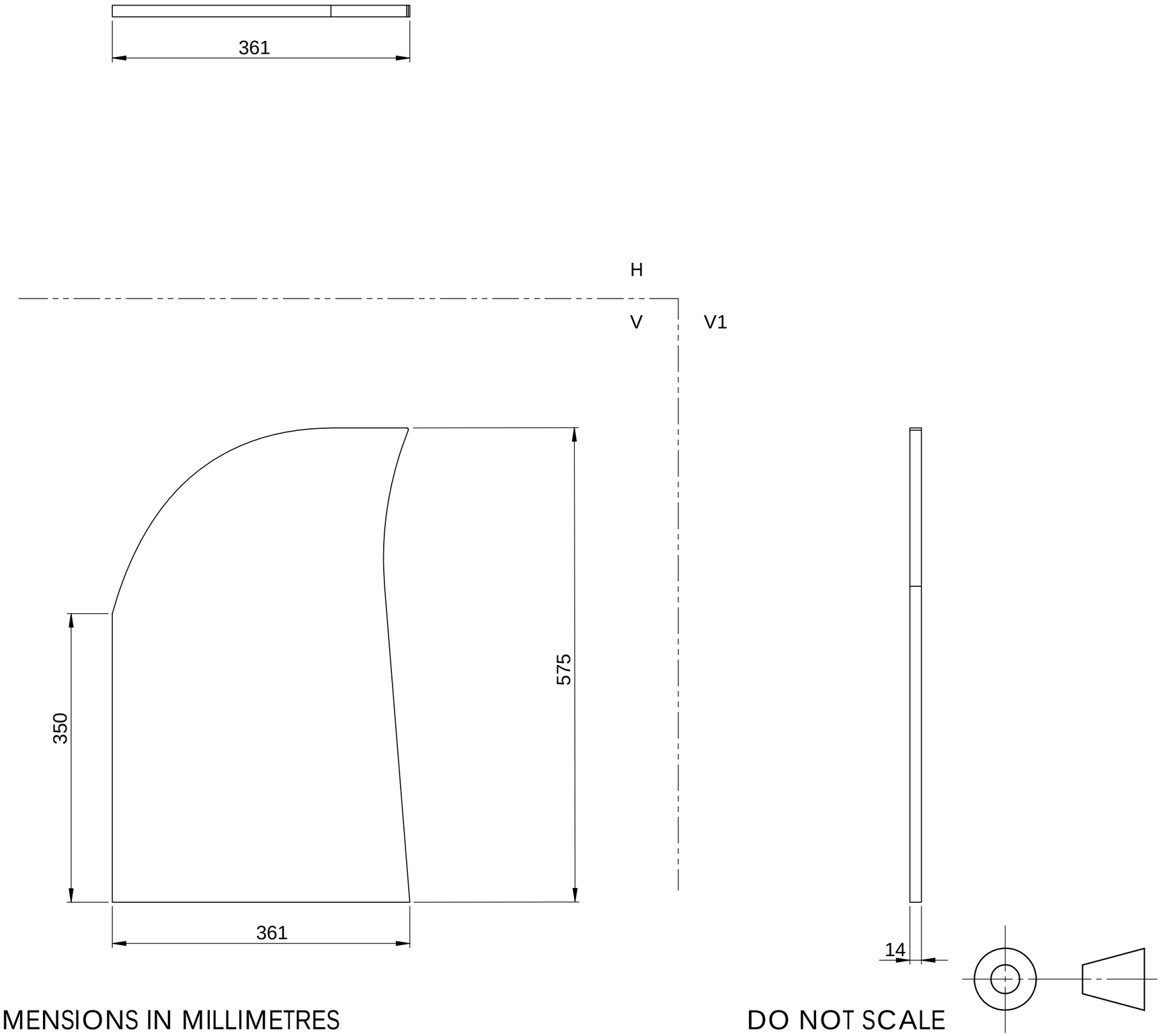

DIMENSIONS IN MILLIMETRES

DO NOT SCALE

AUCKLAND GRAMMAR SCHOOL
Technology Department

Drawn TEO	Date 10/15/15

TITLE: Right handrest side

AA Grade Plywood

SCALE 1:10	DWG NO. COMP 6	A3
SHEET 8 OF 14		

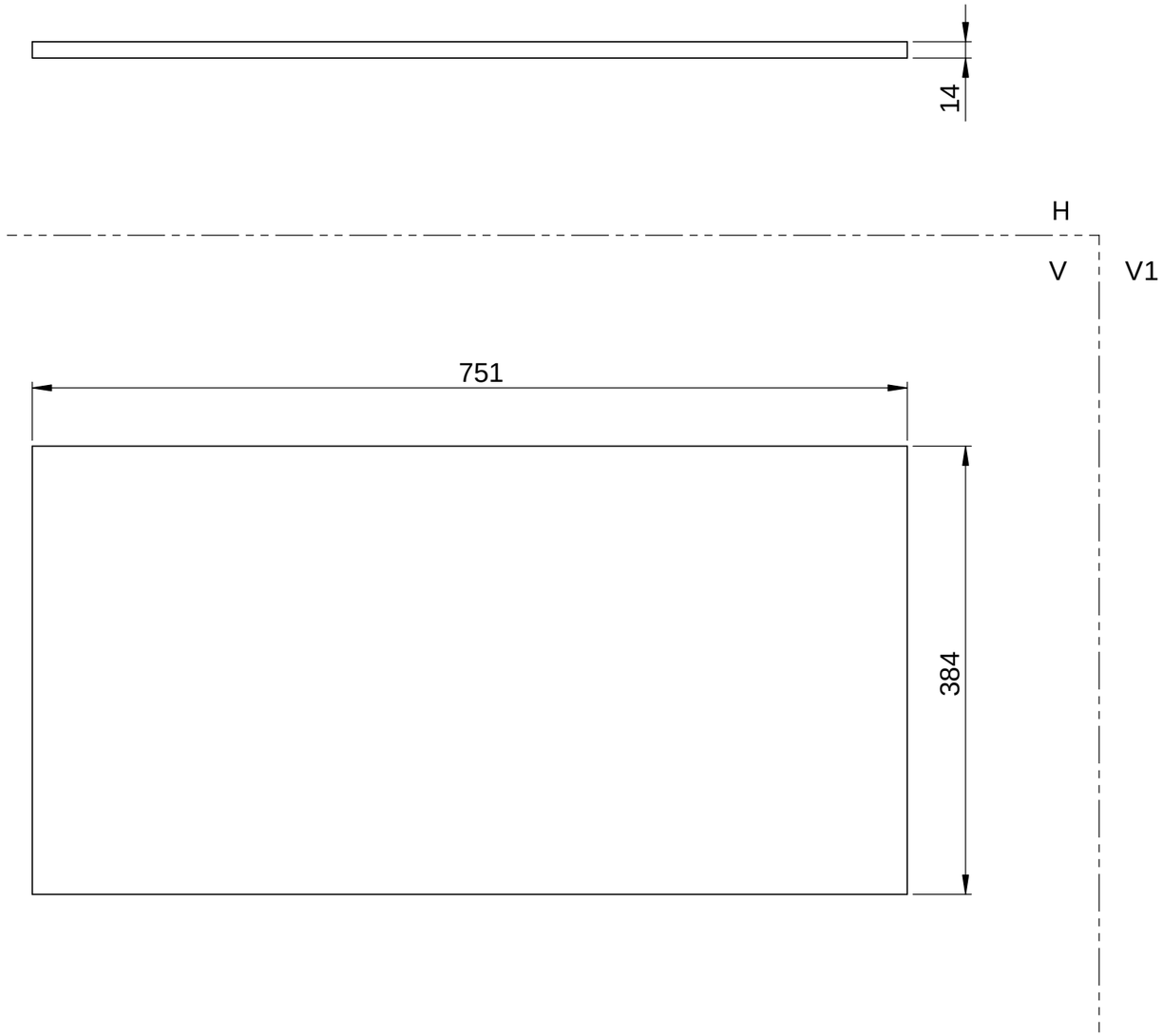

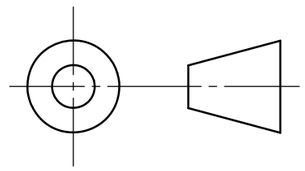

DIMENSIONS IN MILLIMETRES

DO NOT SCALE

AUCKLAND GRAMMAR SCHOOL Technology Department	
Drawn TEO	*Date* 10/15/15
TITLE: Right handrest lower brace	
AA Grade Plywood	
SCALE 1:10	DWG NO. COMP 7	A3
SHEET 9 OF 14	

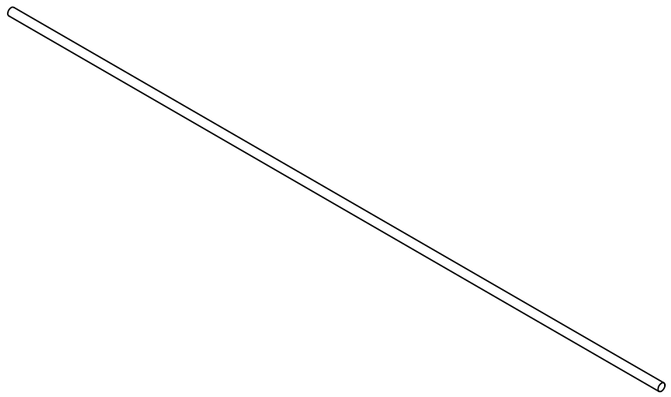

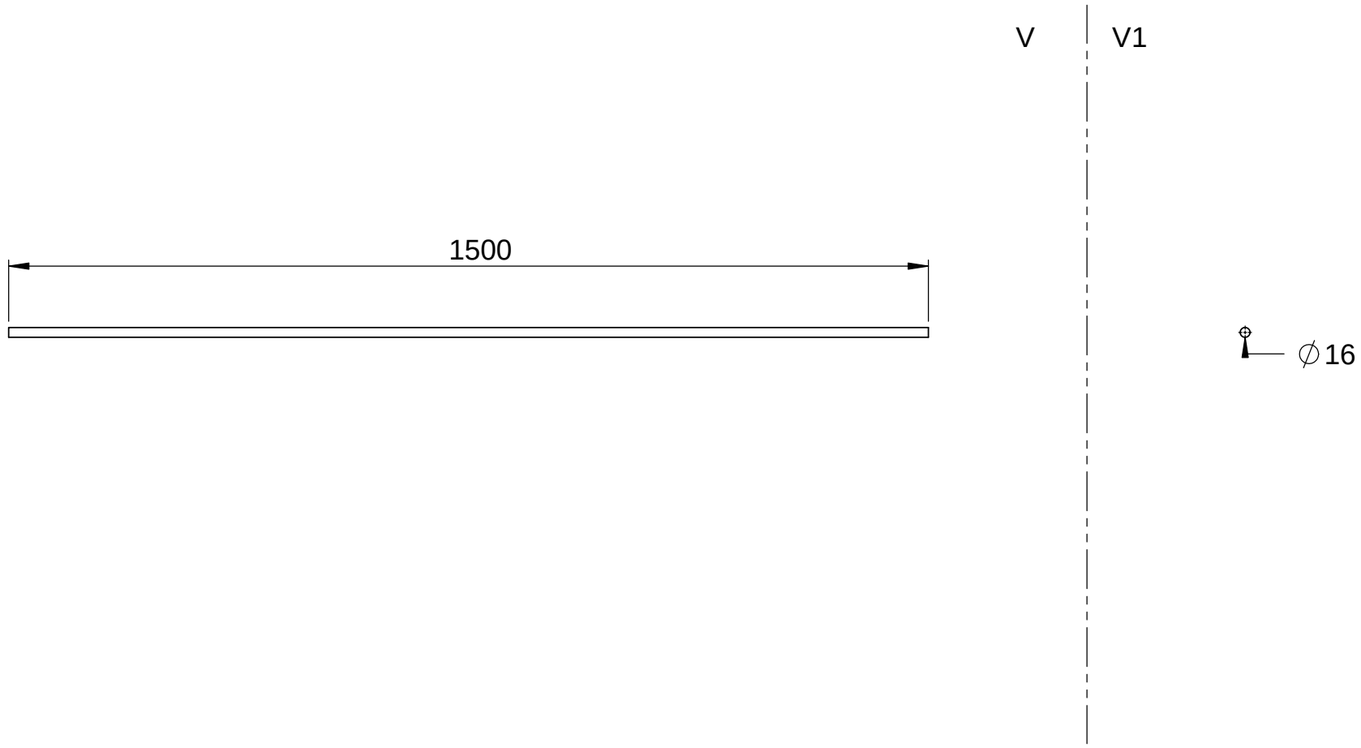

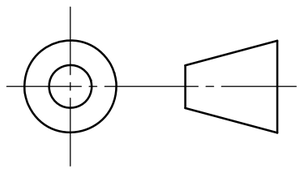

DIMENSIONS IN MILLIMETRES

DO NOT SCALE

AUCKLAND GRAMMAR SCHOOL Technology Department		
Drawn TEO	*Date* 16/10/15	
TITLE: Backrest brace		
3150 H14 alumium alloy		
SCALE 1:10	DWG NO. COMP 8	A3
SHEET 10 OF 14		

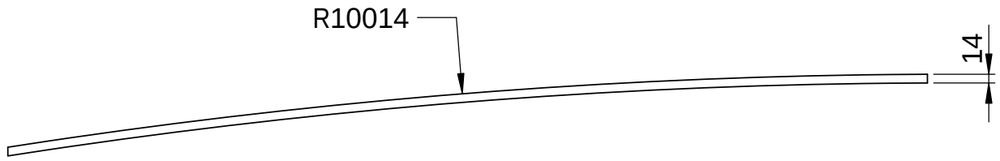

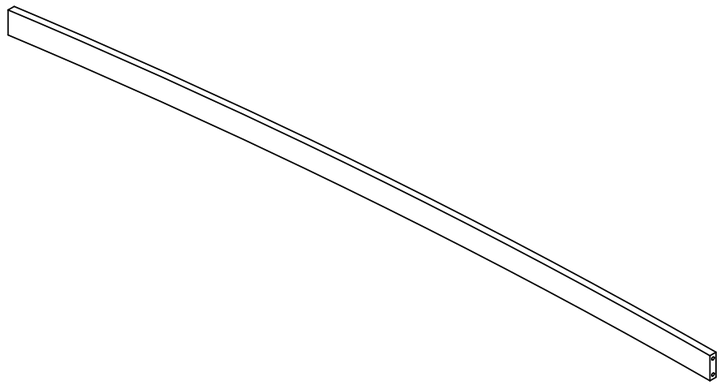

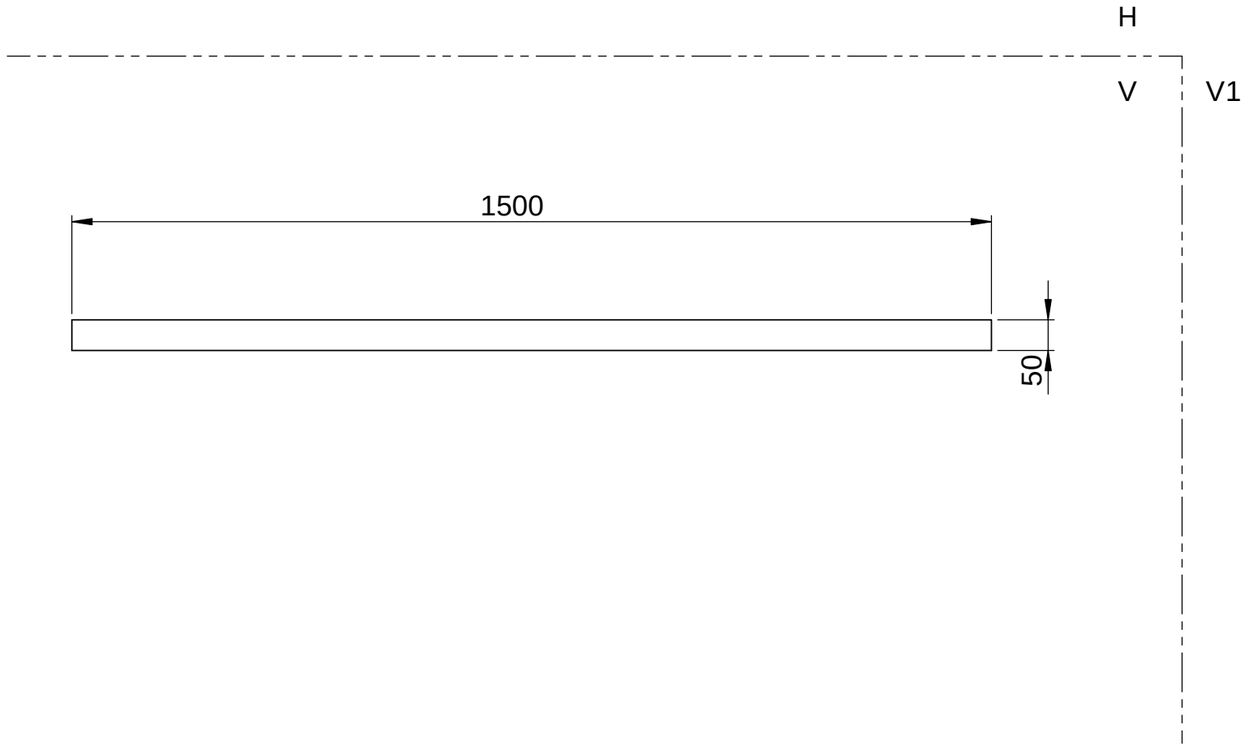

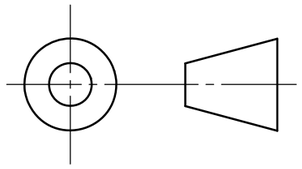

DIMENSIONS IN MILLIMETRES

DO NOT SCALE

AUCKLAND GRAMMAR SCHOOL Technology Department		
Drawn TEO	*Date* 16/10/15	
TITLE: Front rail		
AA Grade Plywood		
SCALE 1:10	DWG NO. COMP 9	A3
SHEET 11 OF 14		

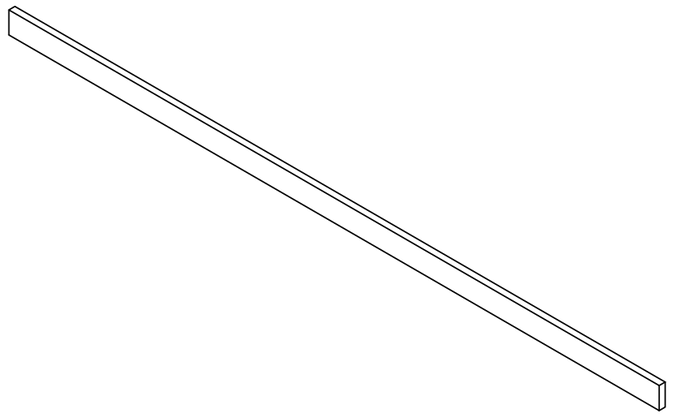

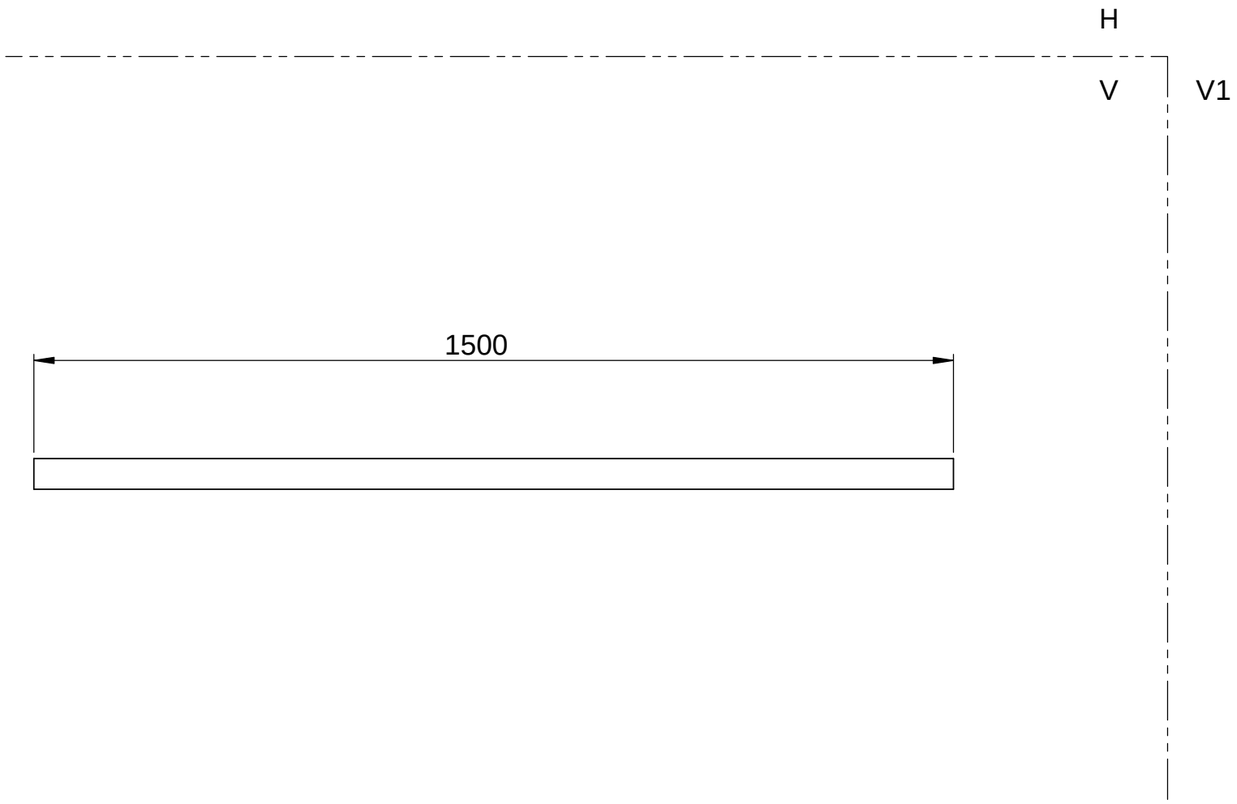

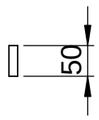

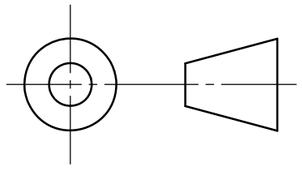

DIMENSIONS IN MILLIMETRES

DO NOT SCALE

AUCKLAND GRAMMAR SCHOOL Technology Department		
Drawn TEO	Date 16/10/15	
TITLE: Centre Top Brace		
AA Grade Plywood		
SCALE 1:10	DWG NO.	A3
SHEET 12 OF 14	COMP 10	

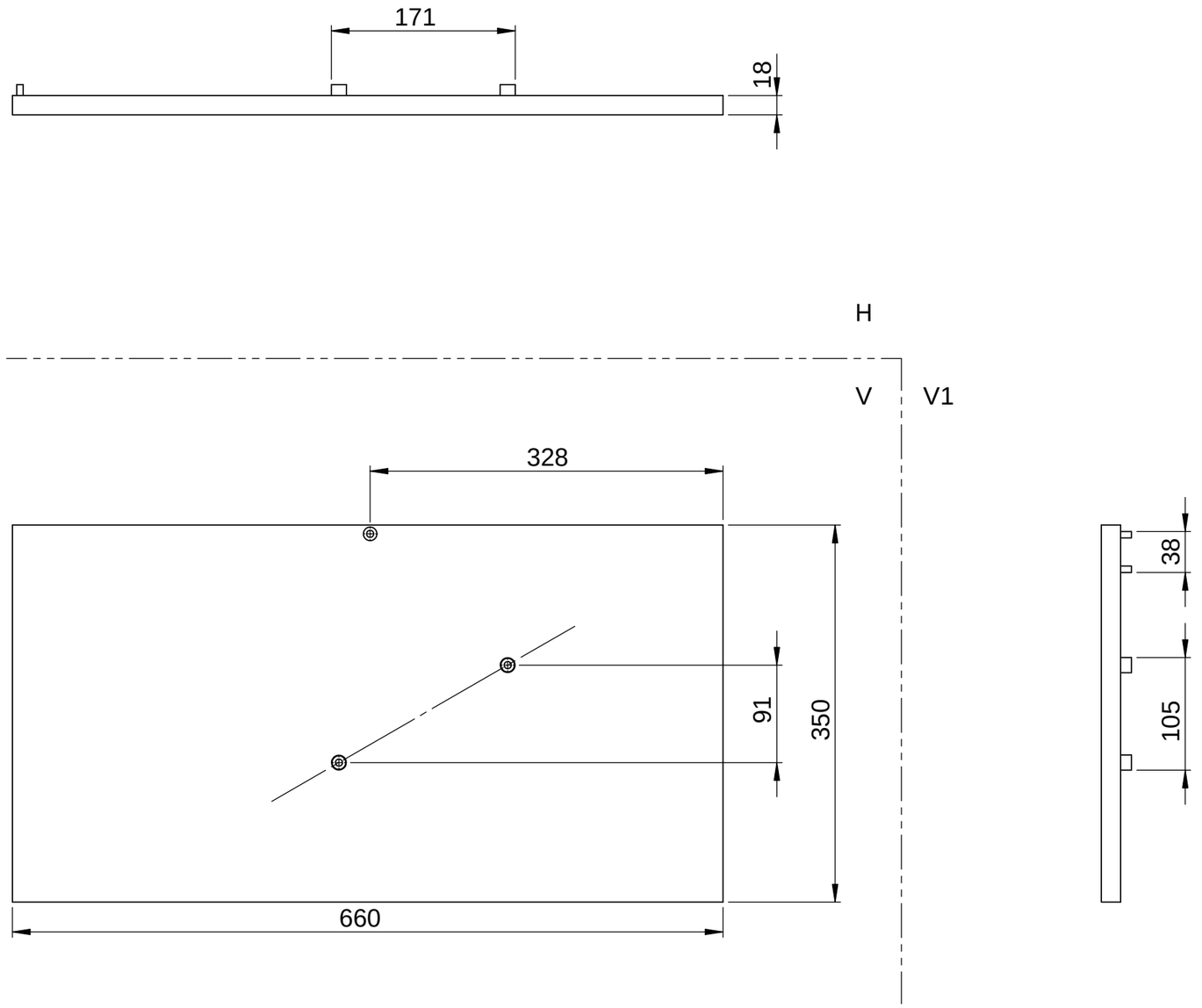

DIMENSIONS IN MILLIMETRES

DO NOT SCALE

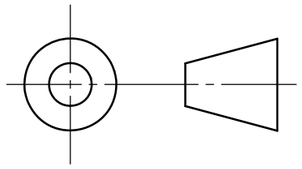

AUCKLAND GRAMMAR SCHOOL Technology Department		
Drawn TEO	Date 28/10/15	
TITLE: Right side		
AA Grade Plywood		
SCALE 1:5	DWG NO.	A3
SHEET 13 OF 14	COMP 11	

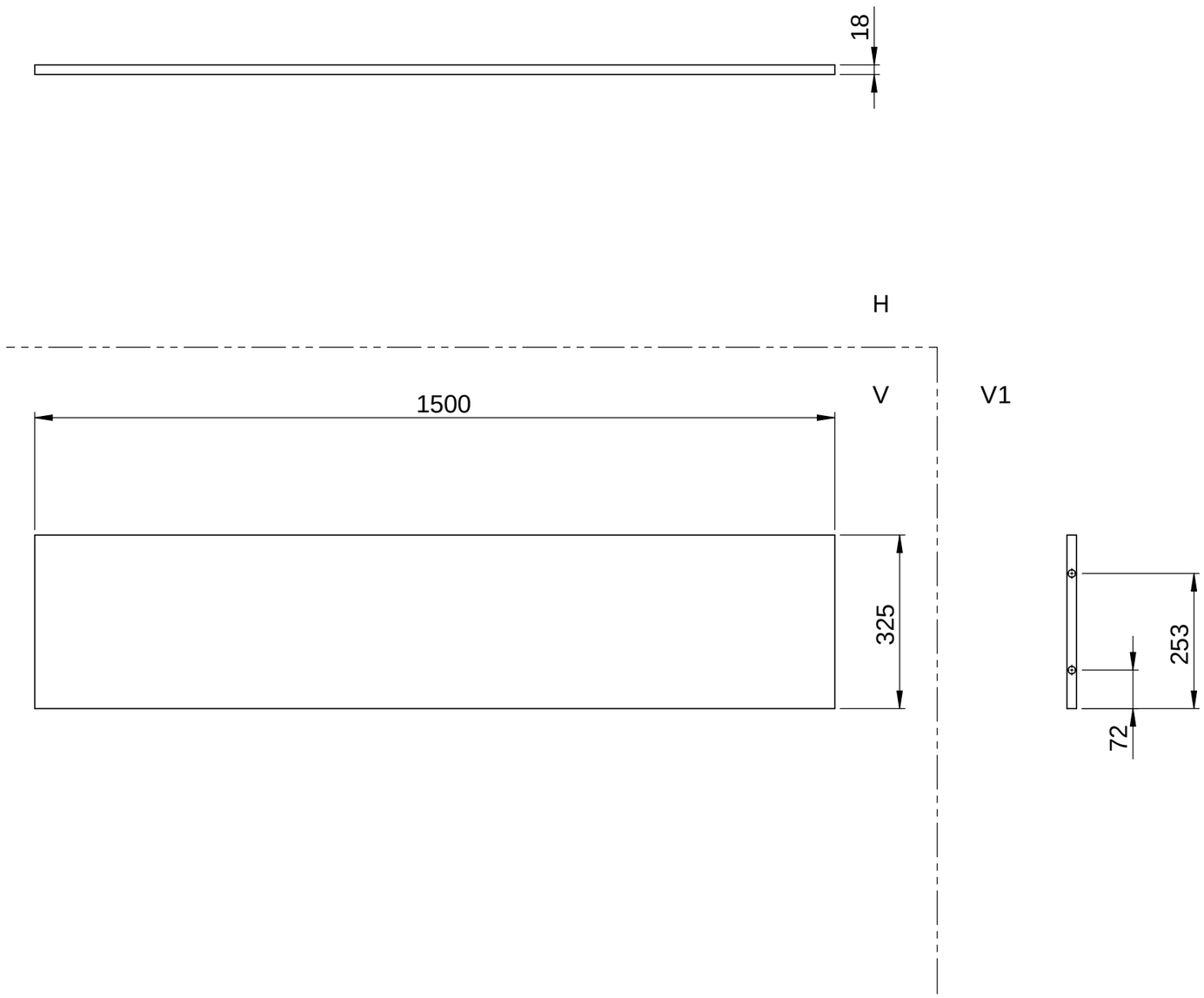

AUCKLAND GRAMMAR SCHOOL
Technology Department

Drawn TEO	Date 28/10/15
TITLE: Lower seat centre brace	
AA Grade Plywood	
SCALE 1:10	DWG NO. COMP 12
SHEET 14 OF 14	A3

DIMENSIONS IN MILLIMETRES

DO NOT SCALE