7Ë0$+, 78$7$+, 7(,$+,.2 72527,.$ '&

.D W—HD W•WDKL ZDLUHKH PRWXN— WH ZKDNDWDXLUD P— W
SDUHQJD LDKLNR WH ZKDNDPDKL KHL ZKDNDWDXLUD L WH SÌ
UHUHN• ND W—HD WH ZKDNDPDKL KHL ZKDNDWDXLUD L QJ— V
WH DUD LDKLNR L UDUR QHL .R WH SDUHQJD LDKLNR R WH S
WH WXNXRUR LWL KH Ÿ .R WH LDKLNR PDL L WH SÌKLNR PF

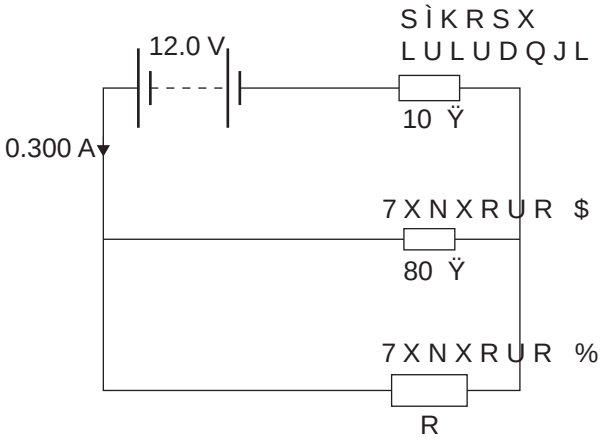

D 7—WDLKLD WH QJDRKLNR ND ZKDNDZKLWL L WH SÌKRSX LU

E 7—WDLKLD WH LDKLNR H UHUH DQD L WH 7XNXRUR $

F +H QXL DNH WH KLNR H ZKDNDPDKLD DQD H WH 7XNXRUR

:KDNDWDXULWHKLD WH SDUHQJD LDKLNR R WH 7XNXRUR %
.—RUH H KLDKLDWLD DQD KH W—WDLWDQJD

- used Descartes formula to calculate distances and height
- explained the properties of refraction and link why the wave speed changes
- clearly described and drew diffraction diagrams
- calculated sequential Snell's law calculations
- drew and described the conditions for total internal reflection and completed calculations involving total internal reflection.

Candidates who were awarded **Achievement with Excellence** commonly:

- wrote comprehensive descriptive answers linking a number of ideas together
- completed two sets of calculations using different formulae to obtain a final answer
- expressed answers to the correct number of significant figures
- knew the difference between three significant figures and three decimal places.

Standard-specific comments

Candidates need to show more precision in the drawing of diagrams (e.g. wave fronts), using a ruler where necessary, clearly showing if wavelength is constant or not, and including arrows on all rays.

91171: Demonstrate understanding of mechanics

Candidates who were awarded **Achievement** commonly:

- found algebraic manipulation difficult
- used physics equations correctly
- correctly calculated torques, but did not know the correct unit
- calculated the energy stored in a spring
- applied physics principles correctly
- showed a basic understanding of physics concepts
- failed to answer questions as asked but made assumptions regarding the required outcome.

Candidates who were assessed as **Not Achieved** commonly:

- failed to attempt much of the paper, often giving up after getting stuck on the first question
- were unable to select or use appropriate physics equations
- could not differentiate between the meanings of 'horizontal' and 'vertical'
- misunderstood physics principles
- did not know physics concepts.

Candidates who were awarded **Achievement with Merit** commonly:

- gave a stock answer to a question on circular motion without giving thought to what was being asked
- used correct physics equations accurately and had knowledge of the correct units for calculated quantities
- could explain the link between forces and torques
- demonstrated in-depth understanding of physics principles by applying such principles in context
- demonstrated in-depth knowledge of physics by writing correct explanations of phenomena.

Candidates who were awarded **Achievement with Excellence** commonly:

- used correct physics equations consistently and accurately and had knowledge of the correct units for calculated quantities
- demonstrated comprehensive knowledge of physics principles by applying such principles in a context where at least two processes needed to be linked
- demonstrated comprehensive understanding of physics by writing correct, clear and concise explanations of phenomena in a novel context
- successfully calculated energy transfer between kinetic and elastic potential energy.

Standard-specific comments

Some candidates displayed a good understanding of projectile motion. Stronger algebraic manipulation skills would help some candidates to achieve at higher levels.

Calculation and explanation questions about forces were sometimes poorly answered with only the more capable candidates able to calculate the force during the collision. Very few could explain that the reason the size of the centripetal force on the car undergoing circular motion did not affect the size of the velocity was that it was at right angles to its motion.

91173: Demonstrate understanding of electricity and electromagnetism

Candidates who were awarded **Achievement** commonly:

- applied Ohms law using the two given values to calculate the third
- calculated current given the power and voltage
- knew the direction of the electric field between parallel plates
- realised potential energy changed to kinetic
- determined the voltage across a resistor
- realised that voltages across resistors in parallel is the same value
- calculated the size and direction of an electric field
- stated that an electron gains kinetic energy as it moves towards a positive terminal.
- calculated the voltage induced in a conductor moving across a magnetic field
- realised that a voltage is induced when a conductor moves across/perpendicular to a magnetic field.

Candidates who were assessed as **Not Achieved** commonly:

- could not apply Ohms law
- thought gravity did not work in a vacuum
- mistook the electric field value as the electric potential energy
- mixed up magnetic and electric fields and forces
- could not apply the right hand slap rule to determine direction
- used general terms like potential energy instead of electric potential energy.

Candidates who were awarded **Achievement with Merit** commonly:

- understood power determined the brightness of a bulb
- described the energy changes of an electron as it went from cathode to anode
- given the resistance of a current-carrying conductor calculated the force acting on it
- realised that to induce a voltage, charges in a conductor must be separated and this can be done by moving a conductor across a magnetic field.

Candidates who were awarded **Achievement with Excellence** commonly:

- discussed how the power of similar bulbs affects their brightness
- identified, described and explained types of forces acting on an oil drop and the charge it must carry to be stationary in an electric field
- calculated the size and direction of a current induced in a conductor moving through a magnetic field at constant speed when connected to an external circuit.

Standard-specific comments

Candidates are advised to reach a clear understanding of the difference between electric and magnetic fields and the forces they produce.

Physics subject page

Copyright © New Zealand Qualifications Authority