SUPERVISOR'S USE ONLY

2

91171

911710

Draw a cross through the box (☒) if you have NOT written in this booklet

+

NZQA | Mana Tohu Mātauranga o Aotearoa
New Zealand Qualifications Authority

Level 2 Physics 2026

91171 Demonstrate understanding of mechanics

Credits: Six

Achievement	Achievement with Merit	Achievement with Excellence
Demonstrate understanding of mechanics.	Demonstrate in-depth understanding of mechanics.	Demonstrate comprehensive understanding of mechanics.

Check that the National Student Number (NSN) on your admission slip is the same as the number at the top of this page.

You should attempt ALL the questions in this booklet.

Make sure that you have Resource Sheet L2–PHYSR.

Show ALL working.

In your answers use clear numerical working, words, and / or diagrams as required.

If you need more room for any answer, use the extra space provided at the back of this booklet.

Check that this booklet has pages 2–12 in the correct order and that none of these pages is blank.

Do not write in the margins (////). This area will be cut off when the booklet is marked.

YOU MUST HAND THIS BOOKLET TO THE SUPERVISOR AT THE END OF THE EXAMINATION.

© New Zealand Qualifications Authority, 2026. All rights reserved.
No part of this publication may be reproduced by any means without the prior permission of the New Zealand Qualifications Authority.

QUESTION ONE: SPRINGS AND ENERGY

A hanging spring is 0.650 m long. When 40.0 N is added to the spring, it stretches to become 0.680 m long.

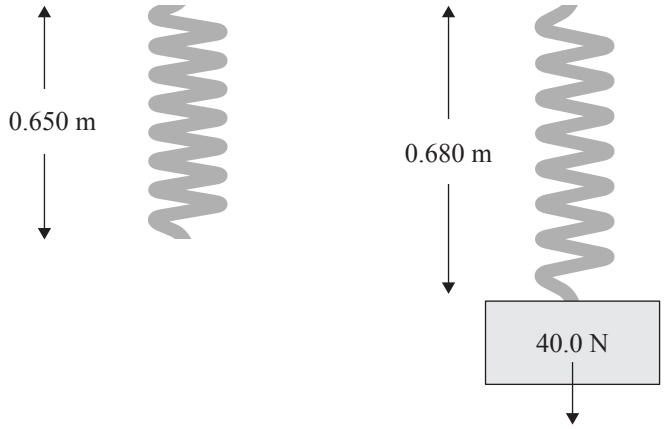

(a) Show the spring constant is 1330 N m^{-1}.

(b) When the spring is laid on its side, it is 0.600 m long. A person takes 0.560 s to compress the spring from 0.600 m to 0.400 m.

Calculate the average power of the person while compressing the spring.

(c) The spring is then compressed so that it stores 180 J of energy. The spring is then used to accelerate a mass of 5.80 kg along a frictionless surface up a ramp, as in the diagram below. There is a horizontal surface at the top of the ramp.

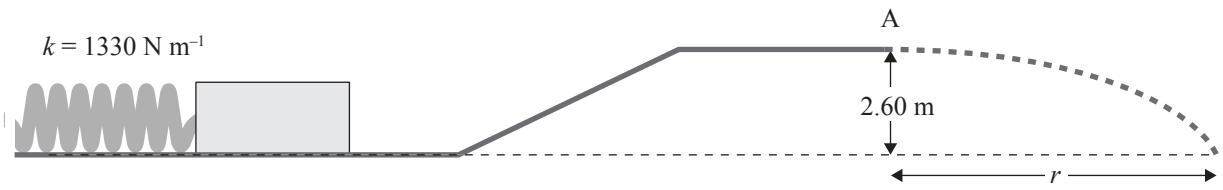

(i) By considering the energy transformations, show that the horizontal speed of the object at point A is 3.30 m s^{-1}.

(ii) Calculate r, the distance the object travels horizontally from the point A above.

(d) The experiment is repeated with a larger mass.

Assuming the larger mass makes it over the edge, compare the distance *r* travelled by the larger mass with that of the original object.

Your explanation should consider:

- the initial energy of the objects
- the speeds at point A
- the time in the air
- the distance covered.

Calculations are not necessary.

QUESTION TWO: CIRCULAR MOTION AND MOMENTUM

A car moves around a circular track at a constant speed.

The radius of the track is 150 m.

The mass of the car and its occupant is 670 kg.

$C = 2\pi r$

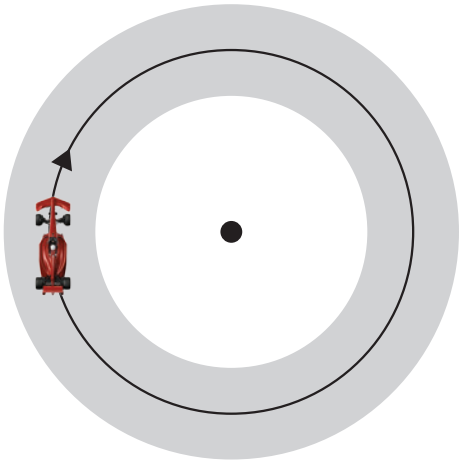

(a) Draw labelled arrows on the car in the position shown, indicating the direction of the acceleration and velocity of the car.

If you need to redraw your response, use the diagram on page 10.

(b) The car completes 4 laps of the track in 5 minutes (300 seconds).

Calculate the centripetal force acting on the car.

(c) Explain how the car can be moving around the circle at a constant speed, yet accelerating.

(d) While coming into the pits, the 670 kg car moving at 4.30 m s^{-1}, collides with a 580 kg car moving at 3.11 m s^{-1} in the same direction. After the collision, the 580 kg car continues moving forward at 4.04 m s^{-1}.

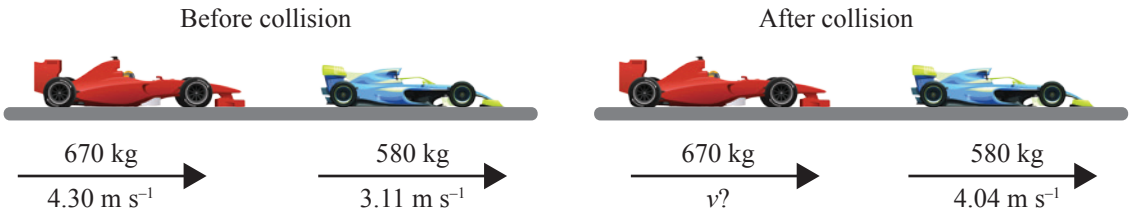

(i) State the condition(s) required for momentum to be conserved in this collision.

(ii) Calculate the speed of the 670 kg car immediately after the collision.

QUESTION THREE: FORCES AND TORQUE

A child pulls an 8.4 kg cart with a 38 N force along the handle. The handle is at 47° to the horizontal. There is a 5.6 N friction force acting on the cart to the right.



Adapted from: https://www.presentermedia.com/powerpoint-clipart/young-boy-pulling-empty-wagon-pid-25645

(a) Show that the vertical component of the force on the handle is 28 N.

(b) Calculate the acceleration of the cart.

(c) If the child can exert a maximum force of 38 N along the handle, explain how he can increase the acceleration of the cart to 3.0 m s^{-2}, assuming friction remains at 5.6 N.

Provide calculations to support your answer.

(d) The child disconnects the handle and wheels, and places the uniform cart tray on two supports. Two toys are loaded into the tray, as shown in the diagram below.

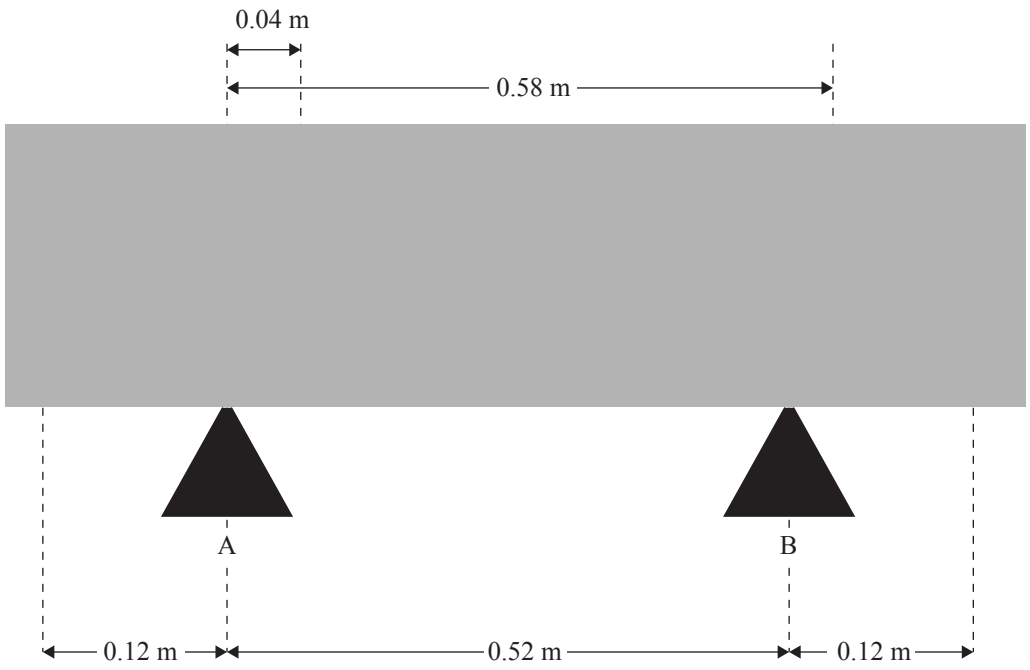

Adapted from: www.mightyape.co.nz/mn/buy/mighty-ape-gund-grahm-bear-small-plush-28675785/
www.whitcoulls.co.nz/antics-kiwi-with-real-sound-13cm-5607943

The weight of the tray without the handle and wheels is 79 N.

The weight of the toy bear is 6.5 N and the weight of the toy kiwi is 5.4 N.

(i) Draw arrows on the diagram opposite to show all the forces acting on the tray.

If you need to redraw your response, use the diagram on page 10.

(ii) By taking torques about point A, calculate the value of the forces acting on the tray.

SPARE DIAGRAMS

If you need to redraw your response to Question Two (a), use the diagram below. Make sure it is clear which answer you want marked.

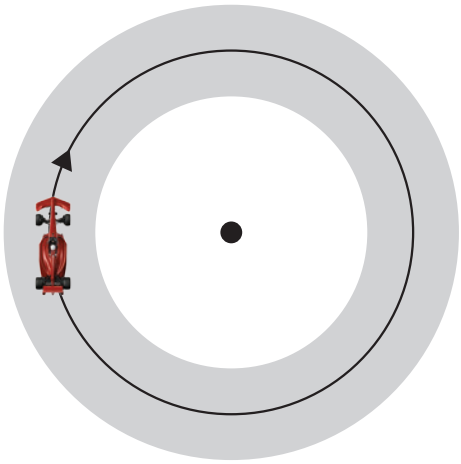

If you need to redraw your response to Question Three (d)(i), use the space below. Make sure it is clear which answer you want marked.

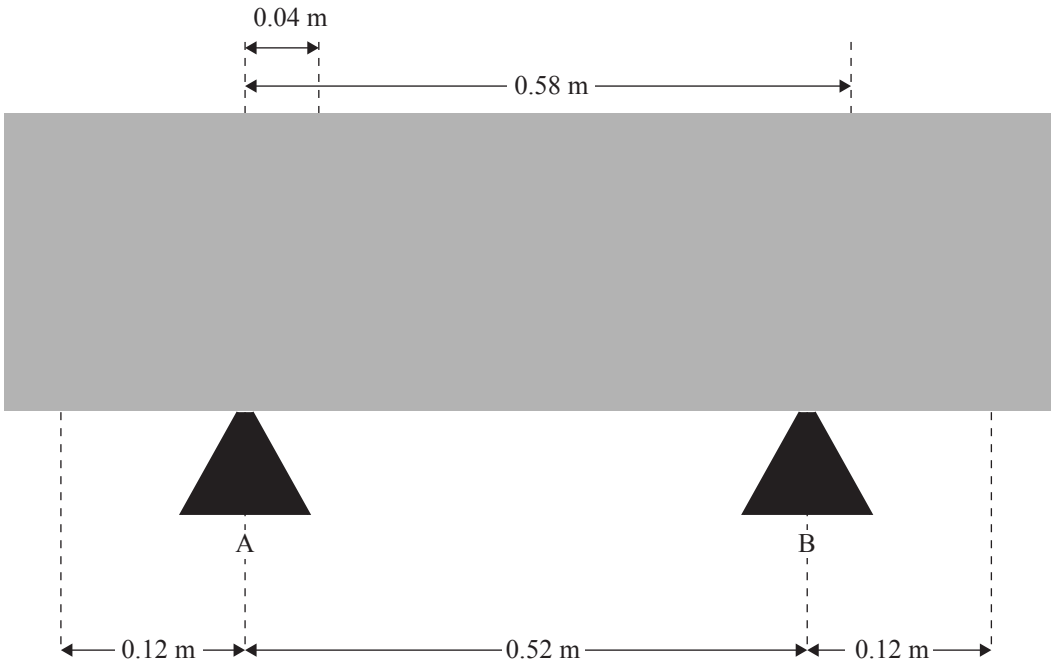

Extra space if required.
Write the question number(s) if applicable.

QUESTION NUMBER

Extra space if required.
Write the question number(s) if applicable.

QUESTION NUMBER